SC0802E (8 CHARACTERS x 2 LINES)

FEATURES

. 5 x 7 DOTS WITH CURSOR

. BUILT-IN CONTROLLER (KS0066 OR EQUIVALENT)

. 2.7.5.5 V POWER SUPPLY

. 1/16 DUTY CYCLE

. 8-BIT PARALLEL INTERFACE

MECHANICAL DATA

ITEM	DIMENSIONS	UNIT
Module Size (W x H x T)	40.0 x 35.4 x 7.4 (12.7 LED)	mm
Viewing Area (W x H)	30.4 x 13.9	mm
Character Size (W x H)	2.95 x 4.75	mm
Character Pitch (W x H)	3.35 x 5.15	mm
Dot Size (W x H)	0.55 x 0.55	mm
Dot Pitch (W x H)	0.60 x 0.60	mm

INTERFACE PIN CONNECTIONS

NO.	SYMBOL	FUNCTION	NO.	SYMBOL	FUNCTION
1	V_{SS}	Supply Ground	9	DB2	Data Bit 2
2	V_{DD}	Supply Voltage	10	DB3	Data Bit 3
3	V_O	Contrast Adj.	11	DB4	Data Bit 4
4	RS	Register Select	12	DB5	Data Bit 5
5	R/W	Read/Write	13	DB6	Data Bit 6
6	E	Enable Signal	14	DB7	Data Bit 7
7	DB0	Data Bit 0			
8	DB1	Data Bit 1			

ELECTRICAL CHARACTERISTICS

ITEM		SYMBOL	CONDITION	MIN.	TYP.	MAX.	UNIT
LCD Operating Voltage		V_{DD}-V_O	T=0.	-	4.8	-	V
			T=25.	-	4.5	-	V
			T=50.	-	4.2	-	V
Supply Voltage		V_{DD}-V_{SS}	-	2.7	5	5.5	V
Supply Current		I_{DD}	-	-	3.2	6	mA
Input Voltage	"HIGH" Level	V_{IH}	-	2.2	-	V_{DD}	V
	"LOW" Level	V_{IL}	-	0	-	0.6	V
Output Voltage	"HIGH" Level	V_{OH}	-	2.4	-	-	V
	"LOW" Level	V_{OL}	-	-	-	0.4	V

BLOCK DIAGRAM

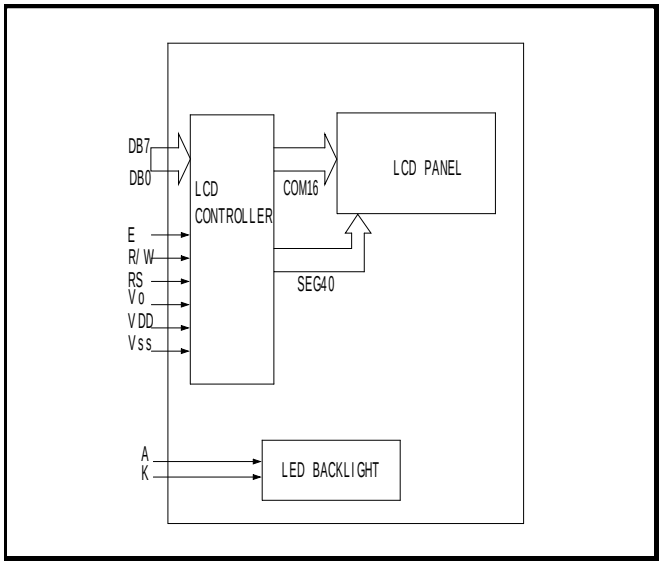
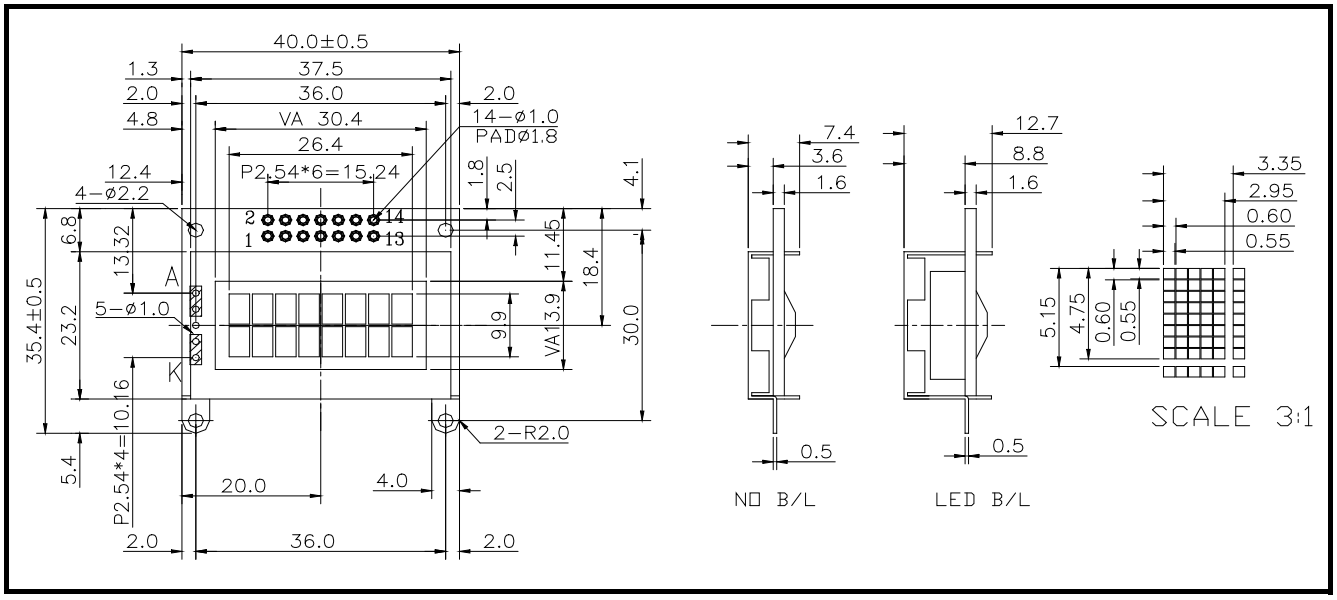
EXTERNAL DIMENSIONS